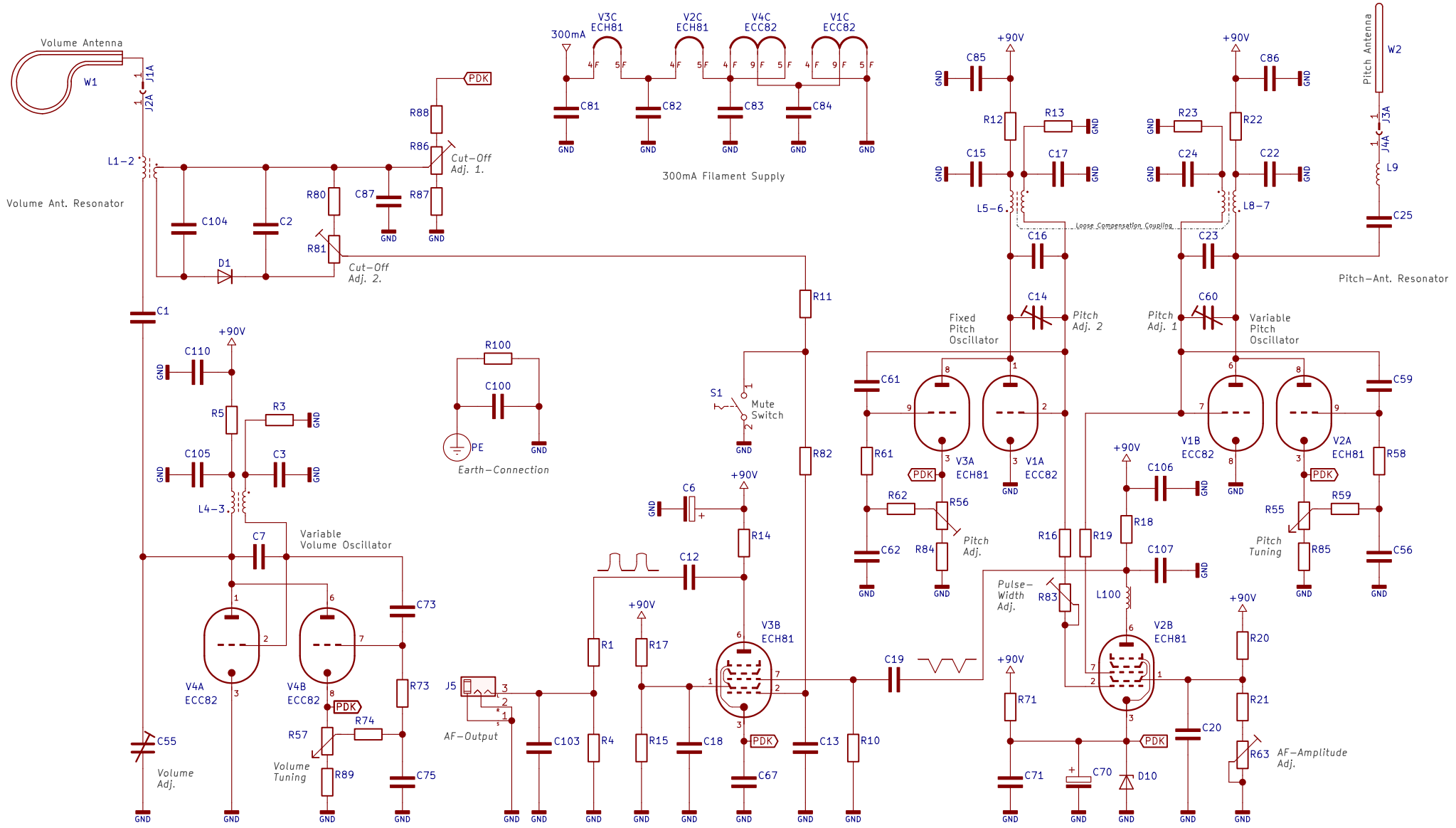

Notes:

C7: Value has to be chosen according to lumped capacity of L4–3

L1: Value has to be chosen according to antenna W1 capacity to ground

L4–3: Air core

L9: Value has to be chosen according to antenna W2 capacity to ground

C16, C23: Value has to be chosen according to lumped capacity of L5–6 and L8–7

L5–6, L8–7: Air core
Distance and orientation of both coils to each other have to be adjusted for ideal pulse–pause ratio of the audio–pulse signal (audio–spectrum) and linear pitch response

Aetherwellen-Musik.de Theremin

Title: Noval Theremin (01–2022)		Aetherwellen-Musik.de MADE IN GERMANY
NOTE: Non–commercial use only!		
Originator: A. Klaus	Project: Termenvox	Date: 2022–01–08
Editior: A. Klaus	Status: DRAFT	Revision: 0.2
File: Noval–Theremin_SCH–NO–VALUES.sch		Size: A4

Sheet: 1 / 1

KiCad E.D.A. eeschema (5.1.2)-2